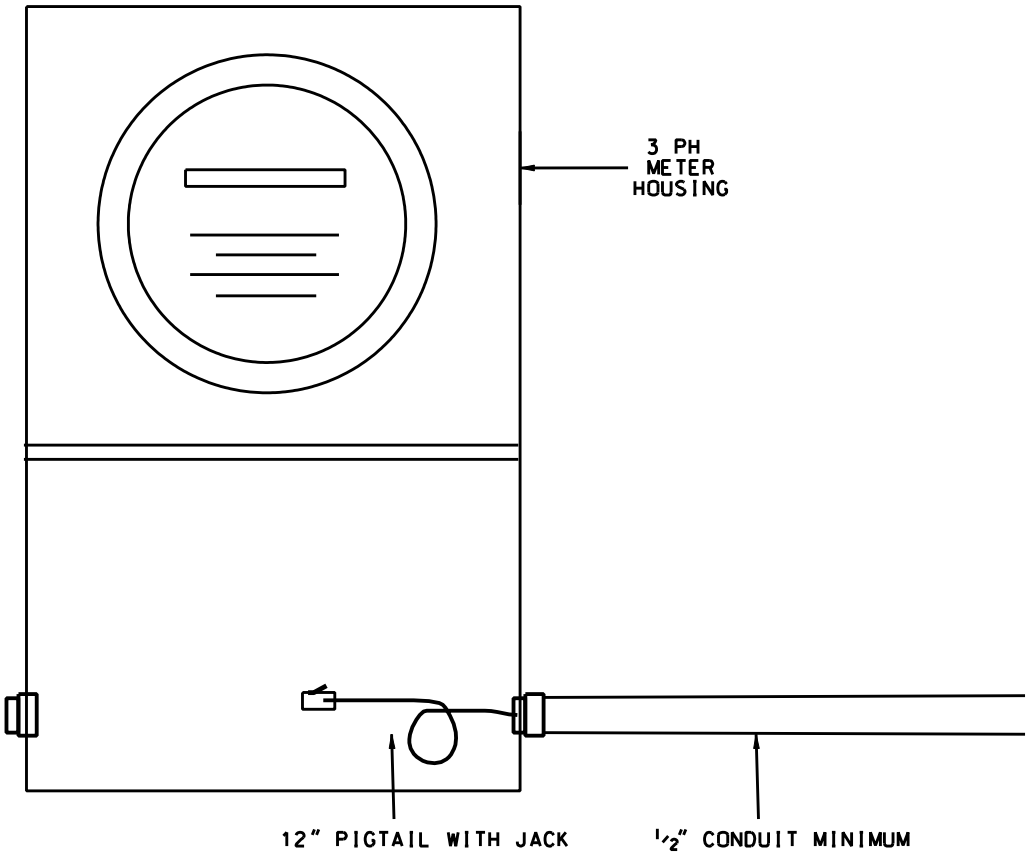

LOAD SURVEY METERING / PHONE LINE SPECIFICATION

1. PHONE LINES ARE REQUIRED FOR ELECTRIC SERVICES 1000 AMPS 277/480 OR 2000 AMPS 120/208 AND GREATER
2. PHONE LINE SHALL BE A DEDICATED LINE, SINGLE PAIR, ANALOG TYPE, ACTIVATED WHEN 2 CONSECUTIVE MONTHS OF 800 KW IS REACHED; PER LPC'S REQUIREMENTS.
3. PHONE LINES SHALL BE INSTALLED IN 1/2" CONDUIT INTO THE LOWER PORTION OF THE METER HOUSING AND IN ACCORDANCE WITH THE N.E.C.
4. PIGTAILS IN THE HOUSING SHALL BE 12" LONG; TERMINATED WITH A PHONE JACK.
5. THIS SPECIFICATION HAS BEEN APPROVED BY THE CITY OF LONGMONT'S ELECTRICAL INSPECTOR AND NO ADDITIONAL CITY INSPECTION OF THE PHONE LINE IS REQUIRED.
6. LPC METERING DIVISION WILL CONFIRM THE SPECIFICATION HAS BEEN FOLLOWED. IF NOT FOLLOWED; LPC, AT ITS DISCRETION, MAY DISCONNECT THE SERVICE.
7. LPC IS AVAILABLE TO OPEN ENERGIZED SERVICES THAT REQUIRE THE ADDITION OF A PHONE LINE. CALL 303-651-8458

LONGMONT POWER & COMMUNICATIONS

METERING PHONE LINE

700-17

REVISIONS	
BY	DATE
JH	9/2009
JH	9/2011

DATE: NOVEMBER 14, 2005

SCALE: NOT TO SCALE